AXOR

hansgrohe

Vernis Shape
3-hole basin mixer with pop-up waste set
Surfaces: **Matt Black** Article Number: **71563670**

Description

product features

- consists of: 3-hole basin mixer, waste set
- ComfortZone 150
- projection 166 mm
- spray type: laminar spray
- maximum flow rate at 3 bar: 5 l/min
- ceramic valves hot/ cold 90°
- suitable for continuous flow water heaters
- pop-up waste set G 1¼
- material waste set: synthetic
- connection type: G ⅜ connections
- connection dimension: DN15

Technology

AirPower

EcoSmart

Comfort Zone

Product image

Scale drawing

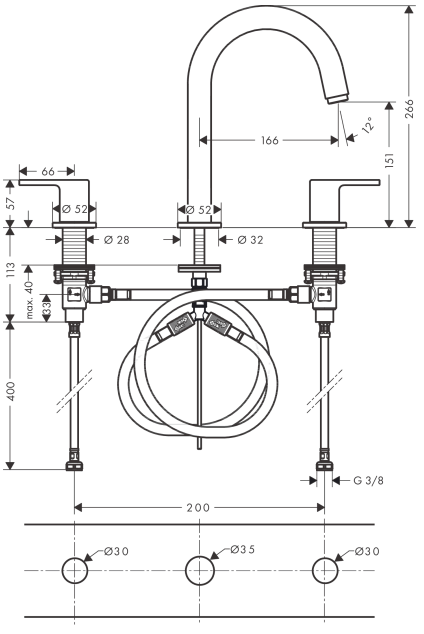
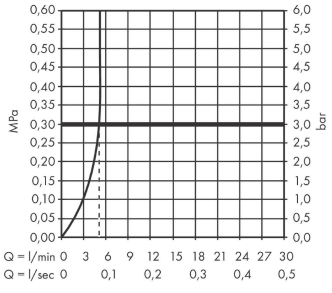
Flowchart